Bourdon Tube Safety Pressure Gauges

With limit switch contact assembly
Safety category S3 according to DIN EN 837-1

RSCh
RSChOe

This data sheet contains information on the maximum possible number of contacts, on electrical connections, ordering information and options concerning the models RSCh and RSChOe with limit switch contact assemblies (with low-action, magnetic, electronic or inductive contacts), as well as dimensional drawings with the position of the electrical connections.

Data sheet 1600 contains all details concerning the available versions of models RSCh and RSChG without limit switches. These details as well as the required ordering information apply also to the version with limit switches, unless otherwise stated below. Instead of glycerin, a special oil is used for liquid-filled pressure gauges with limit switches. The model code for instruments with case filling is RSChOe.

Model overview 9.1000 contains general and detailed definitions, applications and operating principles for the respective limit switch types. It also provides detailed information on the selection, switching functions and minimum spans, on operating conditions, explosion protection, options and others.

Standard Versions

Available Limit Switch Contact Assemblies

1. **Direct** (electromechanical)
   - 1.1 Low-action contact — **S**
   - 1.2 Magnetic contact — **M**
2. **Indirect** (contact-free)
   - 2.1 Electronic contact — **E**
   - 2.2 Inductive contact — **I**
   - 2.3 Pneumatic contact — **P** upon request

Maximum Possible Number of Contacts

	NCS 100 case filling		NCS 160 case filling	
	without	with	without	with
up to 3 x S	O	–	O	–
4 x S[1]	upon request	–	O	–
up to 3 x M	O	O	O	O
4 x M[1]	upon request	–	O	O
up to 3 x E	O	O	O	O
4 x E	upon request	upon request	upon request	upon request
up to 3 x I	O	O	O	O
4 x I	upon request	upon request	upon request	upon request

O = available

Degree of Protection (DIN EN 60 529/IEC 529)
IP54
IP65 for model RSChOe (span ≥2.5 bar)

Blow-out Device
Blow-out back; when pressure increases in the case, the entire case back separates, allowing full relief

Case Ventilation
As standard, oil-filled instruments have a direct ventilation to the atmosphere at the top of the case

Nominal Case Sizes
100, 160 mm (4, 6")

Window
Laminated safety glass

[1] optionally as double change-over contact

Safety Category According to DIN EN 837-1
S3, safety pressure gauge with break-proof solid front and blow-out back
proved: pressure ranges up to 1000 bar (15,000 psi)
bottom connection: RSCh and RSChOe
marking Ⓢ, see also sectional drawing on page 2

Adjusting Mechanism Limit Setting Pointer
All instruments are equipped with an adjusting lock in the window. With the removable key, the limit setting pointer can be externally set to the value of the desired switch point.

Electrical Connection

- for limit switch (S/M): plug connector PA6, black
- for limit switch (E): terminal box PA6, black
- for limit switch (I): terminal box PA6, blue
  for identification of an intrinsically safe circuit, anything else as E

Plug Connector and Terminal Box

6-pin + PE, screwed cable gland M20x1.5 with strain relief, IP65 according to VDE 0110 insulation group C/250, terminals numbered according to wiring diagram (on the device)

Plug Connector

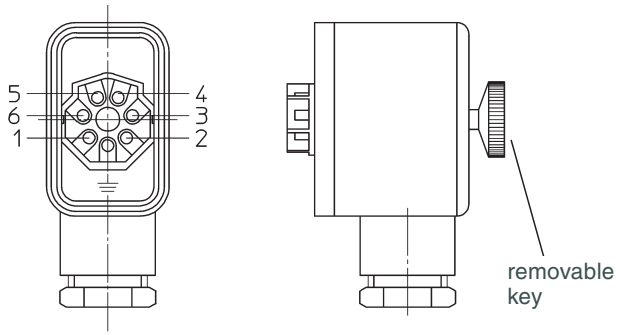

Terminal Box

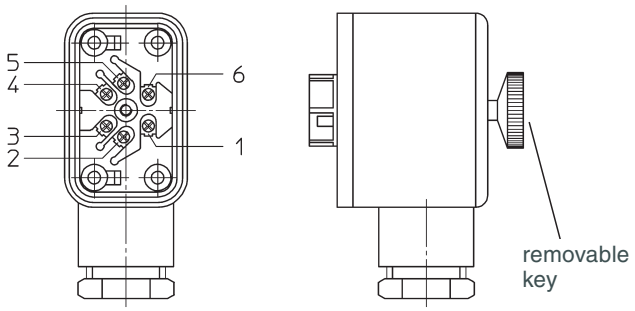

For the position of the electrical connection, please refer to the dimensional drawings, see pages 2 and 4 (cable entry).

www.armano-messtechnik.com

ARMANO
ARMANO Messtechnik GmbH

Location Beierfeld
Am Gewerbepark 9 • 08344 Grünhain-Beierfeld
Tel.: +49 3774 58 – 0 • Fax: +49 3774 58 – 545
mail@armano-beierfeld.com

Location Wesel
Manometerstraße 5 • 46487 Wesel-Ginderich
Tel.: +49 2803 9130 – 0 • Fax: +49 2803 1035
mail@armano-wesel.com

Case Configurations, Code Letters, Dimensional Data and Weights

Compared to the basic models, there are deviations in the front-to-back sizes, see table.
Please refer to data sheet 1600 for the other dimensional data.

Bottom Connection

without mounting device

without code letters

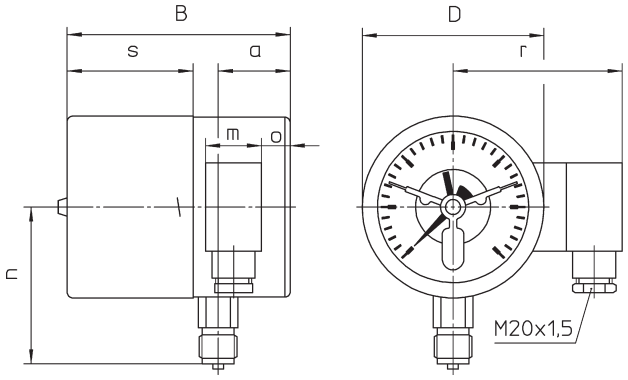

plug connector or terminal box

with back flange for surface mounting

code letters: **Rh**

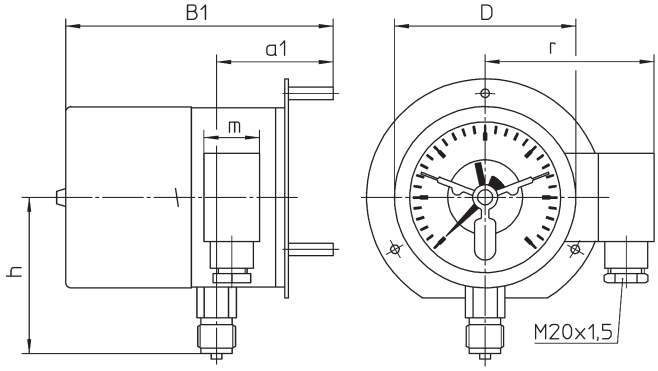

plug connector or terminal box

Version Rh including 3 separate mounting spacers.

with front flange for panel mounting

code letters: **Fr**

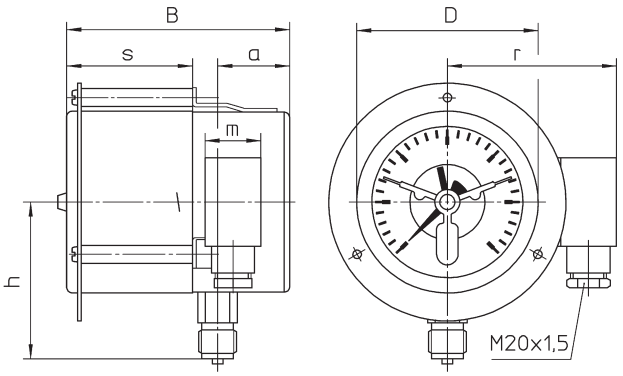

plug connector or terminal box

Version Fr is supplied with three welded brackets and removable front flange.

Dimensional Data (mm/inch) and Weights (kg/lb)

NCS	a	a1	B	B1	D	h±1	m	o	r	s	approx. weight[1] RSCh	approx. weight[1] RSChOe
100	40	65	124	149	101	87	31	3	88	74	1.25	1.65
4"	**1.57**	**2.56**	**4.88**	**5.87**	**3.98**	**3.43**	**1.22**	**0.12**	**3.46**	**2.91**	**2.76**	**3.64**
160	40	70	130[2]	160[2]	161	115	31	12	117	95	2.45	3.85
6"	**1.57**	**2.76**	**5.12**	**6.3**	**6.34**	**4.53**	**1.22**	**0.47**	**4.61**	**3.74**	**5.4**	**8.49**

[1] the data are based on the version with bottom connection and limit switches with 2 contacts
[2] For inductive and electronic limit switches with 2 similar switching functions (i.e. I11 or E11 and I22 or E22, also as part of 3x limit switch contact assemblies) and for 3x and 4x low-action or magnetic contacts, please add 12 mm (0.47") to the lengths B and B1.

Ordering Information, Options

Basic Model:	Bourdon Tube Safety Pressure Gauge with Limit Switch Contact Assembly			RSCh, RSChOe
	When installing limit switches, the order text of the basic device is supplemented by			
	code letters	S	low-action contact	
		M	magnetic contact e.g.	M
		E	electronic contact	
		I	inductive contact	
	code number for the switching function (clockwise direction of action at rising pressure)	1	making contact	
		2	breaking contact e.g.	12
		3	single change-over contact as low-action or magnetic contact	
		11	1st and 2nd making contact	
		12	1st making contact / 2nd breaking contact	
		21	1st breaking contact / 2nd making contact	
		22	1st and 2nd breaking contact	
		33	double change-over contact as low-action or magnetic contact	
Please note	For an optimal function of the devices with limit switch, please specify in your order text: • correct specification of the switching function • switching pressures • switching ranges, which are beyond the adjustment ranges defined by us • if you require a counterclockwise switching direction Information on limit switch contact assemblies with 3 or 4 contacts see page 4			
Options	for all limit switch types	adjusting lock with non-removable key		
		limit switch with pneumatic contact or with micro switch upon request		
		switching distance fixing (2 contacts or more) upon request		
	S/M contacts	separated circuits		
		wire break control (parallel resistor for each contact)		
		contact pins made of special materials upon request		
	E contacts	PNP switching output as 2-wire connection		
	I contacts	safety version SN or S1N (NCS 160 only)		
		reactionless interval switching for NCS 160 with 2 contacts, interval relay required		
	options for electrical connection see page 4			
	other position of the electrical connection upon request			
	case ventilation for outdoor installation			
	other than vertical installation (90°)			
	other position of connection			
	switching points permanently set			
	contacts strongly set (M contacts only)			
	silicone-free version			
	wetted parts free of grease and oil			
	oxygen version			
	helium leak test of the measuring unit			
	dual scale bar/psi			
	accuracy class ASME 2A (0.5)			
Example:				**RSChOe 100, Fr, 0 – 16 bar, G½B, M12**

Limit Setting Pointer, Options

Information on Limit Switches with 3 and 4 Contacts

In contrast to pressure gauges with 2 contacts, pressure gauges with 3 or 4 contacts do not always allow the limit setting pointers to be adjusted one above the other.

Behaviour of the limit setting pointers to each other

Type limit switch	3 limit setting pointers		4 limit setting pointers	
	NCS 100	NCS 160	NCS 100	NCS 160
S, M	adjustable one above the other		only 3 pointers adjustable one above the other	
E, I	only 2 pointers adjustable one above the other		only the two middle pointers adjustable one above the other	only 3 pointers adjustable one above the other

Switching functions

Those limit setting pointers with 3 and 4 contacts, which are not adjustable one above the other, are separated by a point when indicating the switching function.

Example: M 222.1 4-fold; 3rd and 4th limit setting pointer not adjustable one above the other
E 1.22.1 4-fold; only the two middle pointers adjustable one above the other

Minimum distance of the limit setting pointers, which are not adjustable one above the other (in degree)

Type limit switch	NCS 100	NCS 160
S, M	15	10
E, I	35	28

Electrical Connection

Terminal box

- Available for types S/M
- PA6, black, 6-pin + PE, screwed cable gland M20x1.5 with strain relief
- IP65
- according to VDE 0110 insulation group C/250

Plug connector DIN EN 17 5301-803

- IP65, 3-pin + PE and protective contact
- Available for max. 2 x S/M or 1 x E/I
  or 2 x E for option PNP switching output as 2-wire connection

The plug connectors DIN EN 17 5301-803 have the same position of connection as the plug connectors and terminal boxes, see page 2.

Construction type A

for instruments without case filling

Construction type C

for instruments without and with case filling

Circular plug connector

- For instruments without and with case filling
- IP67, 4-pin
- Available for max. 2 x E/I
- With 2 m die cast cable upon request

The circular plug connectors have roughly the same position of connection as the cable entries, see above.

Angular cable box

Straight cable box upon request

© 2021 ARMANO Messtechnik GmbH · Technical changes, replacement of materials and printing errors excepted!